DWG. NO HQ006

NO		MATERIAL	Q'TY	REMARK

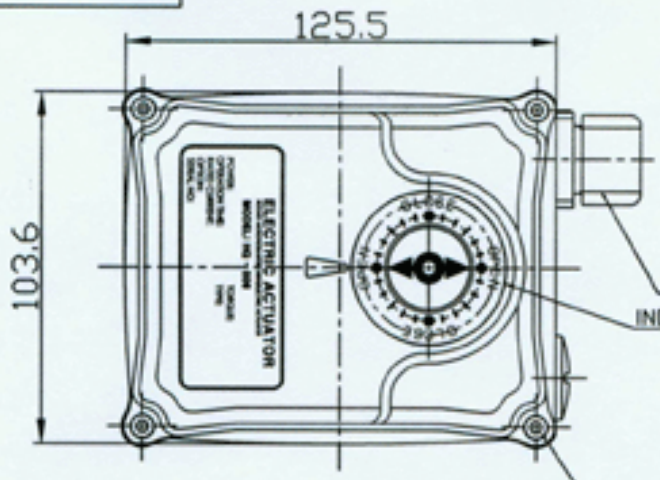

ENCLOSURE: IP65
TORQUE: 6Kg.m
OPERATION TIME: 13sec
POSITION SWITCH: 4 SPDT SWITCH
CABLE ENTRY: PG 13.5 x 2
MOUNTING FLANGE: F03/F05/F07
occ to DIN/ISO5211

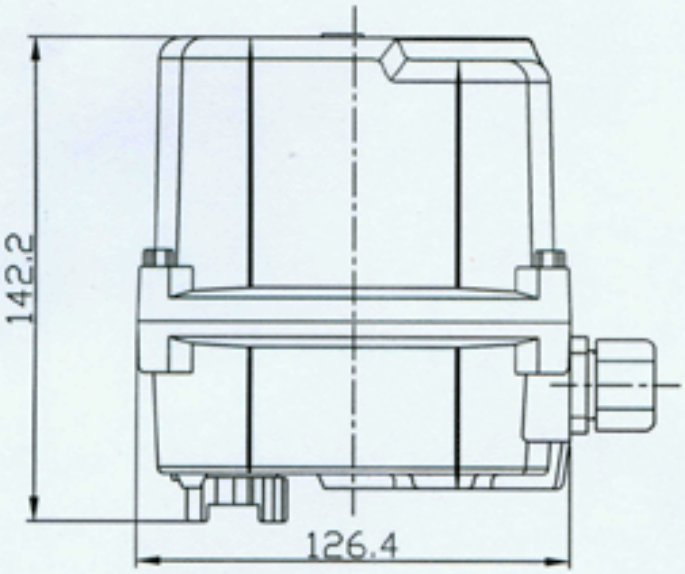

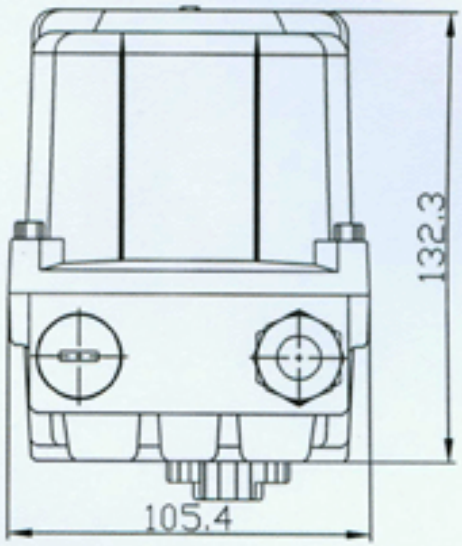

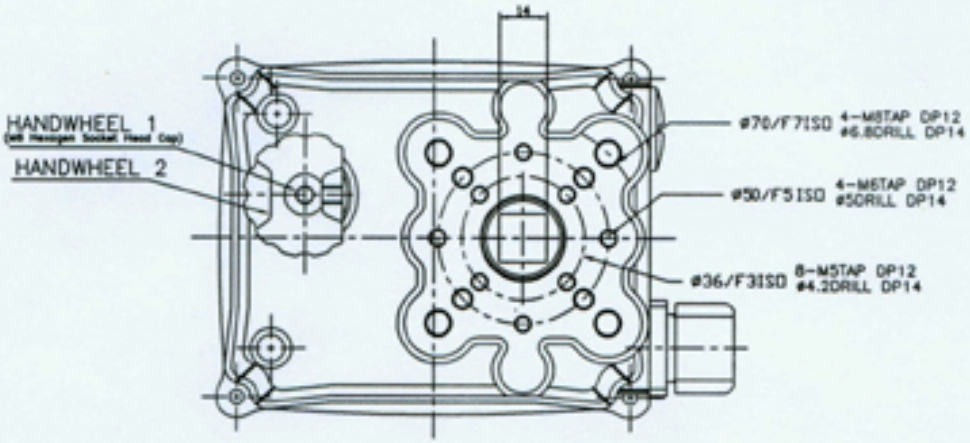

HQ006	1
APPLICATION	

UNLESS OTHERWISE SPECIFIED				MATERIAL	PROJ.	SYM	ECN NO	CHANGES	DATE	SIGN	APPR.
CLASS \ DR.	1ST GRIND	2ND GRIND	3RD GRIND								
0.5 ~ 6	0.08	0.1	0.2	ALT. MAT.	DRAW P.S.KIM	SCALE 1/1	ISSU. DEPT. HADR	PART NAME HQ-006 LYOUT			
6 ~ 30	0.1	0.2	0.4								
30 ~ 120	0.15	0.3	0.6								
120 ~ 315	0.2	0.5	0.8	HEAT TREAT.	DESIGN S.M.HAN	DIM. mm	DATE 2003.1.22				
315 ~ 1000	0.3	0.8	1.2								
1000 ~ 2000	0.5	1.2	3.0								
GENERAL TOL.					CHECK	HKC		DWG. NO HQ006			
ANG. TOL.	GEN. CH. 0.5			SURF. TRET.	APPR.	HK CONTROMATIC CO., LTD.		1 OF 1 SHEET	DWG. SIZE		